| PROJECT REFERENCE NO. | SHEET NO. |
|---|---|
| U-5105 | UC-3A |

DESIGNED BY: RBW
DRAWN BY: JNA
CHECKED BY: CLS
APPROVED BY: RBW
REVISED:

NORTH CAROLINA DEPARTMENT OF TRANSPORTATION

UTILITIES ENGINEERING SEC.
PHONE:(919)707-6690
FAX:(919)250-4151

NORTH CAROLINA PROFESSIONAL SEAL ENGINEER RONALD B. WILKINS
DocuSigned by: Ronald B. Wilkins 5308BF7AF145423...
5/17/2018 4:30:19 PM EDT

UTILITY CONSTRUCTION PLANS ONLY

# UTILITY CONSTRUCTION

HINDE ENGINEERING
License No. C-2639
401 Harrison Oaks Blvd., Suite 145 Cary, NC 27513

**DOCUMENT NOT CONSIDERED FINAL UNLESS ALL SIGNATURES COMPLETED**

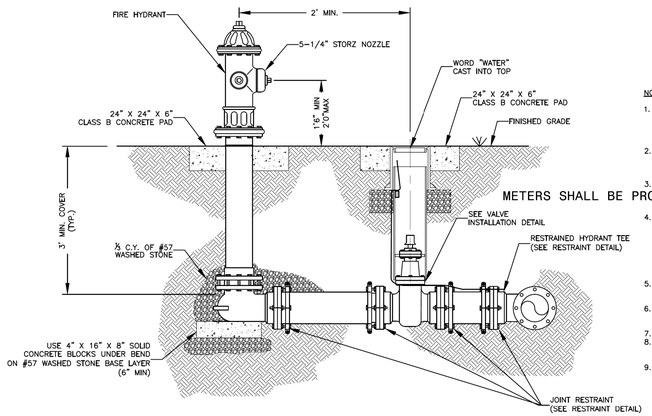


METERS SHALL BE PROVIDED BY THE CONTRACTOR ROCKY MOUNT.

NOTES:

1. FIRE HYDRANT SHALL BE MUELLER CENTURION OR APPROVED EQUAL TESTED BY AWWA STANDARDS TO 350 PSI WORKING PRESSURE WITH 5-1/4 STORZ NOZZLE.
2. ALL VALVES AND HYDRANTS SHALL HAVE M. J. CONNECTIONS WITH IRON RETAINING GLAND M.J. RESTRAINT.
3. FIRE HYDRANT SHALL BE FACTORY PAINTED YELLOW. PAINT SHALL BE APPROVED BY THE ENGINEER BEFORE PRODUCT IS ACCEPTED.
4. HYDRANT VALVE SHALL BE PLACED AS CLOSE AS POSSIBLE TO THE MAIN, BUT DO NOT PLACE VALVE IN PROPOSED OR EXISTING CURB AND GUTTER. IF THE STREET IS SOIL AND NO PAVING IS TO BE DONE AT THIS TIME, THE LOCATION OF THE VALVE IS TO BE DETERMINED BY THE ENGINEER.
5. FIRE HYDRANTS SHALL BE PLACED AS DIRECTED BY THE ENGINEER.
6. HYDRANT BRANCH SHALL NOT BE BACK FILLED UNTIL INSPECTED AND APPROVED BY THE ENGINEER.
7.
8. GATE VALVE AND BOX SHALL BE IN ACCORDANCE WITH STANDARD DETAIL.
9. HYDRANT EXTENSIONS AND/OR OFFSETS SHALL BE APPROVED BY THE ENGINEER.

## 12 / WD-4 FIRE HYDRANT STANDARD INSTALLATION

NOT TO SCALE 04/04/18 △1

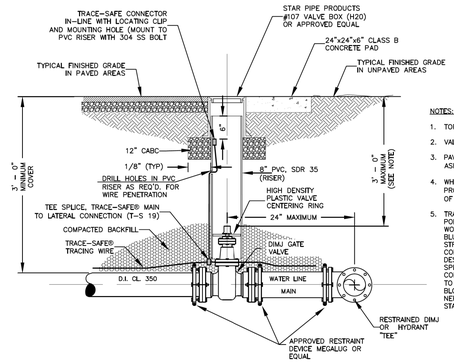


NOTES:

1. TOP OF COVER SHALL BE STAMPED "WATER"
2. VALVE PAD REQUIREMENTS SHALL NOT BE APPLICABLE FOR PAVED SURFACES.
3. PAVEMENT REPAIR SHALL MATCH EXISTING ROAD PAVING SECTION. SEE NCDOT ASPHALT REPAIR DETAIL # 654.01.
4. WHEN OPERATING NUT DEPTH EXCEEDS 3'-0" BELOW FINISHED GRADE, PROVIDE EXTENSION STEM WITH STANDARD 2" SQUARE OPERATING NUT. TOP OF NUT SHALL BE WITHIN 5" TO 9" OF FINISHED GRADE.
5. TRACER WIRE WILL BE A 19 GAUGE, TIN COATED, COPPER CONDUCTOR WITH POLYETHYLENE INSULATION. CORE MATERIAL COMPRISED OF HIGH-TENACITY, WOVEN POLYESTER WITH WATER BLOCKING YARNS ENCAPSULATED IN 30 MIL. BLUE HDPE JACKET PROVIDING CORROSION RESISTANCE, FLEXIBILITY, IMPACT STRENGTH AND 1800 LBS. TENSILE STRENGTH. TRACER WIRE WILL NOT CONDUCT AN ELECTRICAL CURRENT WHEN STRUCK BY LIGHTNING AND IS DESIGNED FOR DIRECT BURY AND DIRECTIONAL BORING APPLICATIONS. WHEN SPLICES AND LATERAL CONNECTIONS ARE MADE, ONLY GEL FILLED CONNECTORS DESIGNED FOR WIRE WITH WOVEN POLYESTER FIBER CORE ARE TO BE USED. TRACER WIRE AND CONNECTORS SHALL BE TRACE-SAFE® WATER BLOCKING TRACER WIRE AND RELATED CONNECTORS, MANUFACTURED BY NEPTCO, INC., OR APPROVED EQUIVALENT, AND PRODUCED IN THE UNITED STATES OF AMERICA.

## 5 / WD-2 VALVE INSTALLATION DETAIL

NOT TO SCALE 04/04/18 △1

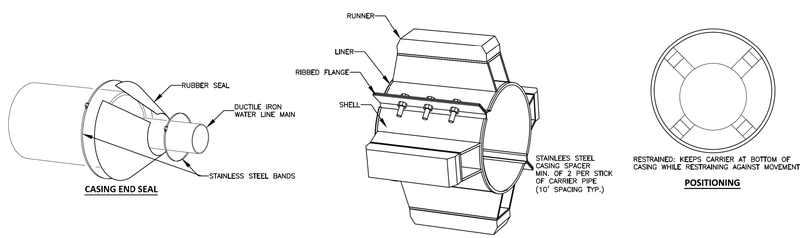


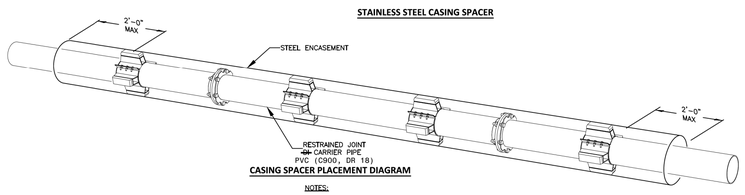


NOTES:

1. RESTRAINED POSITIONING TO BE USED AT ALL TIMES.
2. CARRIER PIPE JOINTS SHALL BE MECHANICALLY RESTRAINED.
3. STAINLESS STEEL CASING SPACERS SHALL BE STYLE CCS AS MANUFACTURED BY CASCADE WATERWORKS MFG. CO. OF YORKVILLE, IL OR ENGINEER APPROVED EQUIVALENT.
4. CASING END SEAL SHALL BE STYLE CCES AS MANUFACTURED BY CASCADE WATERWORKS MFG. CO. OF YORKVILLE, IL OR ENGINEER APPROVED EQUIVALENT.

## 16 / WD-5 CARRIER PIPE IN STEEL ENCASEMENT

NOT TO SCALE 04/04/18 △1

| METER SIZE | METER BOX SIZE | METER BOX | STRAIGHT BALL SERVICE VALVE | STRAIGHT DUAL CARTRIDGE CHECK VALVE |
|---|---|---|---|---|
| 3/4" * | 3/4" | FORD CB111-233-NL | FORD B81-233W-NL | HHC81-333-NL |
| 1" | 1" | FORD CB111-444-L-T-NL | FORD B81-344W-NL | HHC81-444-NL |

* REQUIRES REDUCER L84-34G NL

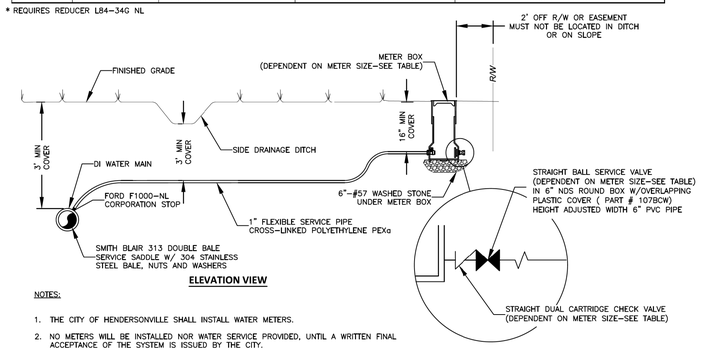


NOTES:

1. THE CITY OF HENDERSONVILLE SHALL INSTALL WATER METERS.
2. NO METERS WILL BE INSTALLED NOR WATER SERVICE PROVIDED, UNTIL A WRITTEN FINAL ACCEPTANCE OF THE SYSTEM IS ISSUED BY THE CITY.
3. EXTEND TRACER WIRE FROM MAIN TO METER BOX. WIRE NOT SHOWN FOR CLARITY. TRACER WIRE WILL BE A 19 GAUGE, TIN COATED, COPPER CONDUCTOR WITH POLYETHYLENE INSULATION. CORE MATERIAL COMPRISED OF HIGH-TENACITY, WOVEN POLYESTER WITH WATER BLOCKING YARNS ENCAPSULATED IN 30 MIL. BLUE HDPE JACKET, PROVIDING CORROSION RESISTANCE, FLEXIBILITY, IMPACT STRENGTH AND 1800 LBS. TENSILE STRENGTH. TRACER WIRE WILL NOT CONDUCT AN ELECTRICAL CURRENT WHEN STRUCK BY LIGHTNING AND IS DESIGNED FOR DIRECT BURY AND DIRECTIONAL BORING APPLICATIONS. WHEN SPLICES AND LATERAL CONNECTIONS ARE MADE, ONLY GEL FILLED CONNECTORS DESIGNED FOR WIRE WITH WOVEN POLYESTER FIBER CORE ARE TO BE USED. TRACER WIRE SHALL BE TERMINATED IN METER BOX AT MOUNTED TRACE-SAFE® LOCATING CLIP, MOUNTED A MAXIMUM OF 3" FROM TOP OF BOX WITH 304 SS BOLT. TRACER WIRE AND CONNECTORS SHALL BE TRACE-SAFE® WATER BLOCKING TRACER WIRE AND RELATED CONNECTORS, MANUFACTURED BY NEPTCO, INC., OR EQUIVALENT APPROVED BY ENGINEER, AND PRODUCED IN THE UNITED STATES OF AMERICA.

## 8 / WD-2 MINIMUM SERVICE LINE: 1" SERVICE LATERAL INSTALLATION

NOT TO SCALE 02/16/18 △1

17-MAY-2018 13:10
C:\SS\WORK\PROJECTS\2014\A201411102.00 Mulkey-U-5105\Design\Utilities\Engineering\UC\Proj\U5105_Ut_dtl_UC3A_psh.dgn
USER: rbwilkins
PLANSHEET: 69